Rural Energy Limited.
Unit 21, Burrough Court, Burrough-on-the-Hill,
Melton Mowbray, Leicestershire, LE14 2QS
Tel: +44 (0) 1664 454 989 Fax: +44 (0) 8709 120423
E-mail: info@ruralenergy.co.uk Website: www.ruralenergy.co.uk

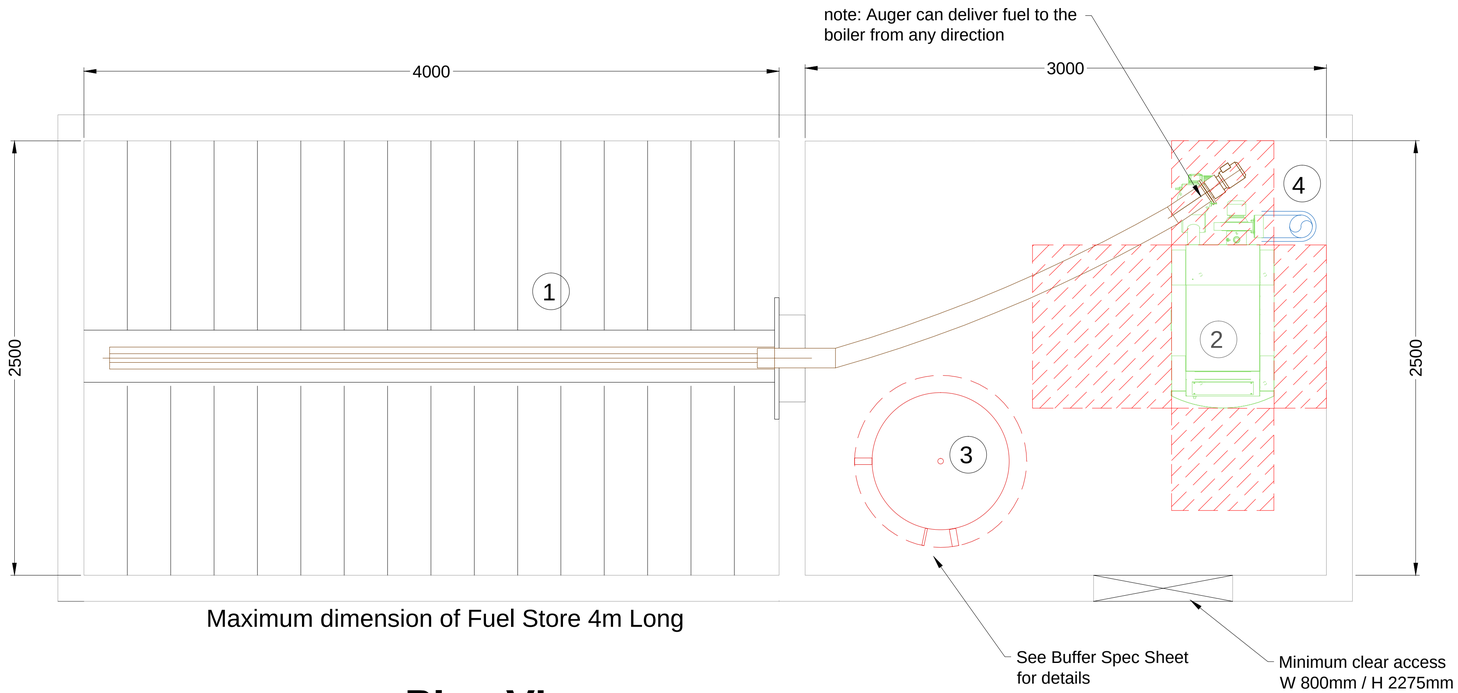

Plan View

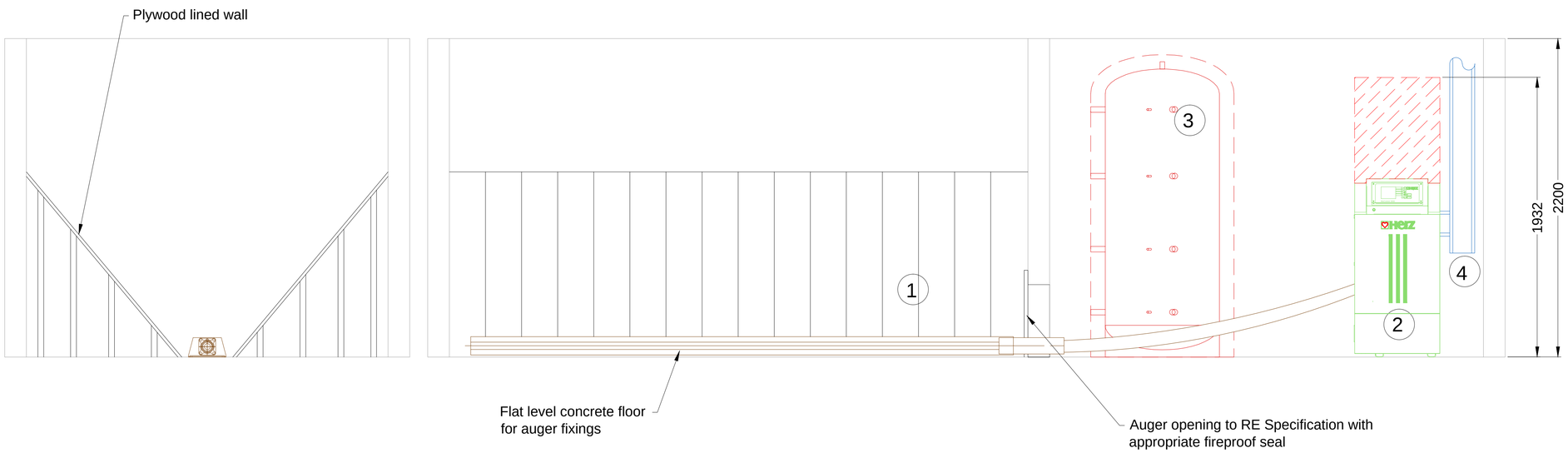

Sectional View

Bill of materials:

1. Spring agitator fuel feeding system
2. Herz Pelletstar pellet boiler
3. Buffer tank
4. Chimney riser

Supporting documentation:

- RE Flue design guide
- RE buffer tank specification sheet
- RE buffer tank control description and sizing guide
- Boiler data sheets
- Cyclone grit arrestor data sheet
- Wiring diagrams
- RE Hydraulic schematics
- RE design details
- RE Chip fuel store design guide
- RE Pellet hopper design guide

Plinths are not required for the boilers or cyclone, provided there is adequate protection against flooding

Rural Energy provides this drawing for the purposes of locating the heating system and ancillary equipment, but takes no responsibility for the design of the fuel store or the plant room in any respect

Clearance for maintenance

Drawing Name

EXAMPLE LAYOUT
Pelletstar.
Pellets, Flexi auger, building integrated fuel store.

Boilers

Herz kW

Drawing Number	Scale @ A1
RE_009-20-30.V1	nts
Designed by	**Date**
PM/AP	07.09.2010